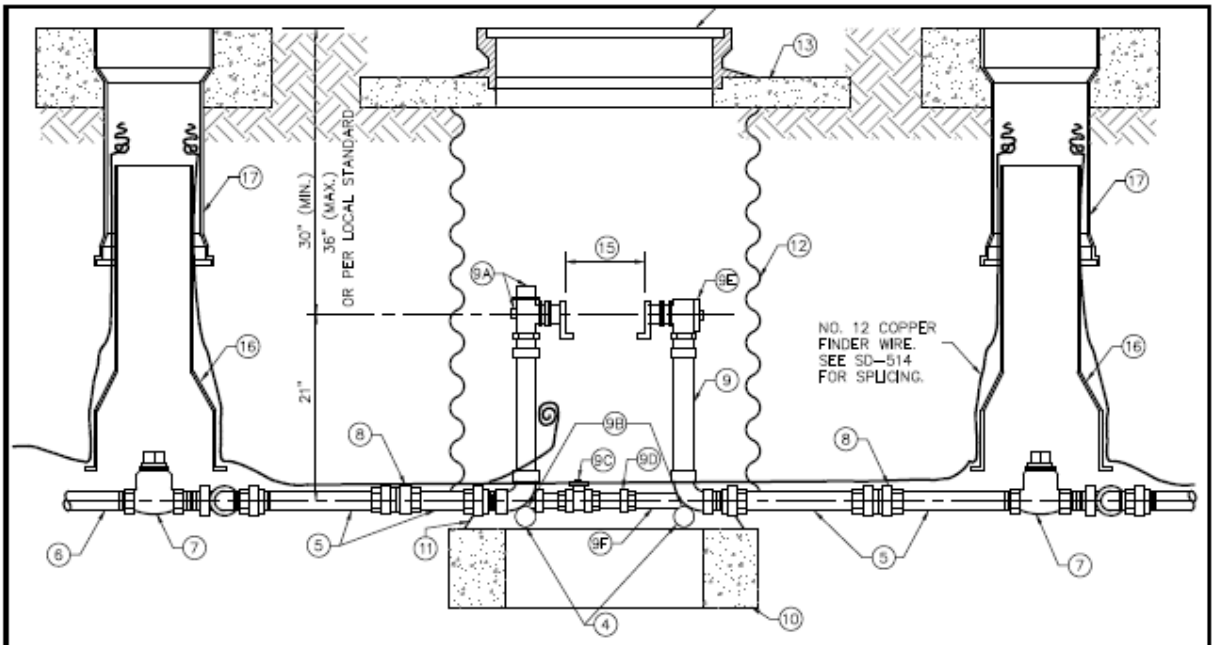


## WATER SERVICE CONNECTION DETAIL

N.T.S.

## LEGEND

1. WATER MAIN PER SECTION-401.
2. SADDLE WITH CC THREAD AND STAINLESS STEEL STRAP.
3. BALLCORP TYPE FB400 INLET AWWA TAPER-CC X PACK JOINT W/S.S. INSERT (FORD 1 1/2" (FB1001-6), 2" (FB1001-7)).
4. 1" DIA. GALVANIZED BRACE PIPE (APPROX. 18" LONG), 2 REQUIRED.
5. 6" LONG RED BRASS NIPPLE.
6. SERVICE LINE: 1 1/2" OR 2" POLYETHYLENE PIPE WITH PACK JOINT BRASS FITTINGS AND STAINLESS STEEL INSERTS.
7. FORD BALL VALVE CURB STOP W/ VALVE RISER AND LOCKING LID (IF REQUIRED).
   1 1/2" = B11-666
   2" = B11-777
8. RED BRASS UNION.
9. METER SETTER W/ THE FOLLOWING FACTORY ASSEMBLED ITEMS:
   A. ANGLE BALL VALVE WITH PADLOCK WING.
   B. BRACE PIPE EYELETS STANDARD.
   C. BALL VALVE WITH PADLOCK WING ON BY-PASS.
   D. BY-PASS PACK JOINT.
   E. ANGLE CHECK VALVE.
   F. RED BRASS BY-PASS.
10. 2" X 35" O.D. CONCRETE GRADE RING (UNDER YOKE).
11. NOTCH CMP FOR OFFSET ON GRADE RING.
12. 30" DIA. X 44" MIN. LENGTH CMP.
13. 4" X 35" O.D. CONCRETE GRADE RING.
14. STANDARD 24" DIA. MANHOLE RING & "WATER" COVER.
15. 1 1/2" METER = 13 1/4" WITH GASKETS, 2" METER = 17 1/4" WITH GASKETS.
16. 4" DIA. SEWER PIPE. NOTCH BOTTOM TO FIT OVER CURB STOP.
17. VALVE BOX

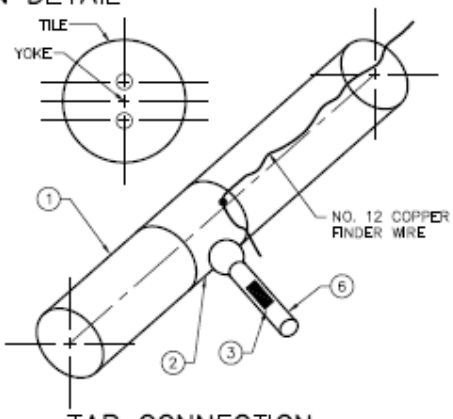


## TAP CONNECTION

N.T.S.

## NOTES:

(A) ALL PRODUCTS AS NOTED OR APPROVED SUBSTITUTION.

(B) THE DIAMETER (1-1/2" OR 2") OF EACH APPURTENANCE SHOWN HEREON IS THE SAME AS THE METER SIZE.

(C) NO BY-PASS ALLOWED ON METER SETTERS FOR LANDSCAPE OR PRESSURIZED IRRIGATION SYSTEM.

(D) SD-402 WATER SERVICE CONNECTION (1 1/2"- 2") ALLOWED IF TWO OR MORE YOKES ARE USED FOR THE SAME SERVICE.

(E) NO GALVANIZED PIPE OR YELLOW BRASS FITTINGS.

(F) NO TAPS WITHIN ONE FOOT OF THE PIPE ENDS.

2015

| IDAHO STANDARDS FOR PUBLIC WORKS CONSTRUCTION | WATER SERVICE CONNECTION (1 1/2" - 2") | STANDARD DRAWING NO. SD-402 |
|---|---|---|